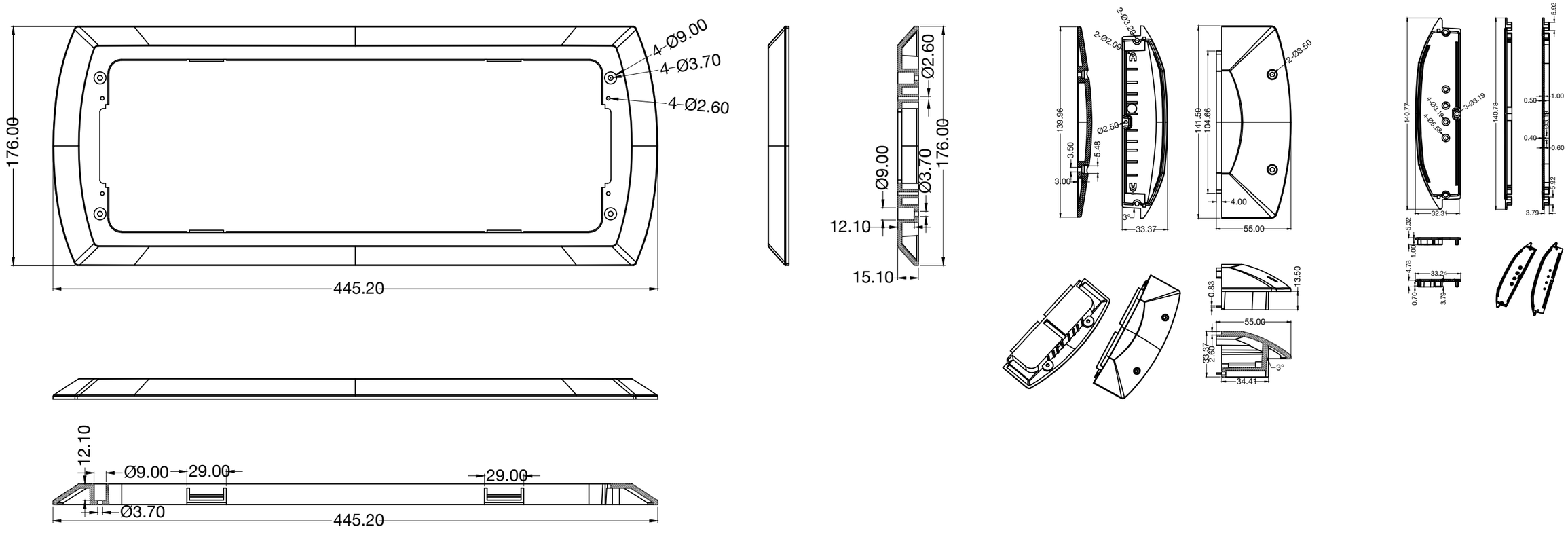

4-Ø9.00
4-Ø3.70
4-Ø2.60
176.00
445.20
Ø2.60
Ø9.00
Ø3.70
176.00
12.10
15.10
2-Ø3.20
2-Ø2.00
Ø2.50
139.96
3.50
5.48
3.00
3°
33.37
141.50
104.66
2-Ø3.50
4.00
55.00
0.83
13.50
55.00
33.37
2.60
3°
34.41
140.77
4-Ø3.19
4-Ø5.58
3-Ø3.19
140.78
5.92
0.50
1.00
0.40
0.60
5.92
3.79
32.31
5.32
1.00
4.78
33.24
0.70
3.79
12.10
Ø9.00
29.00
29.00
Ø3.70
445.20