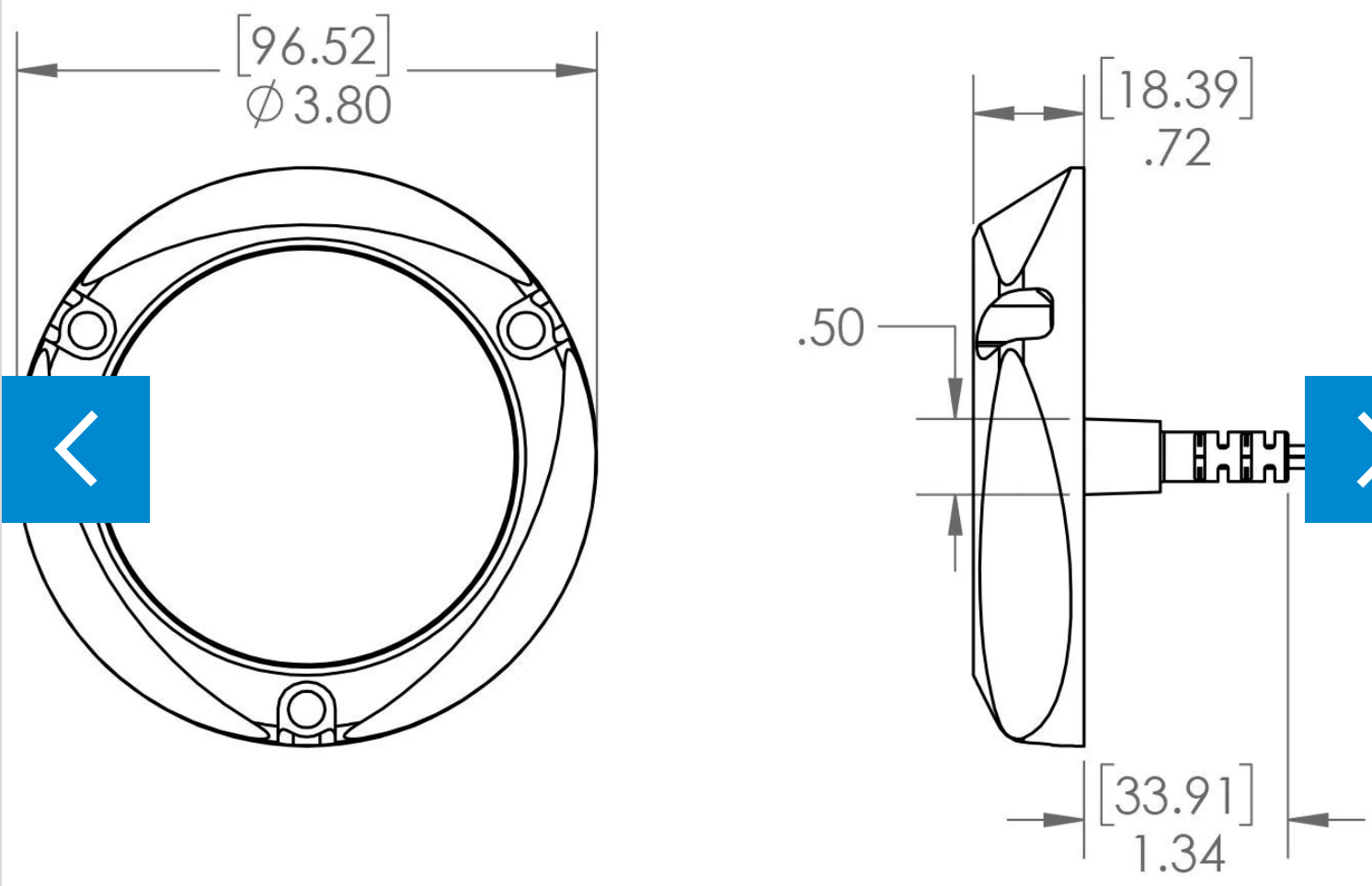
[96.52]
∅3.80
[18.39]
.72
.50
[33.91]
1.34